instock

Eclipse Specialist Door Hardware

34813 Anti-Ligature Lever Set

Solid Stainless Steel Grade 304
50mm Diameter x 10mm Rose thick
Supplied with security Torx head fixings Bolt Through
38mm centres to allow bolt through on lock cases

Designed to meet TS001 Enhanced requirement & test methods for anti-ligature hardware.
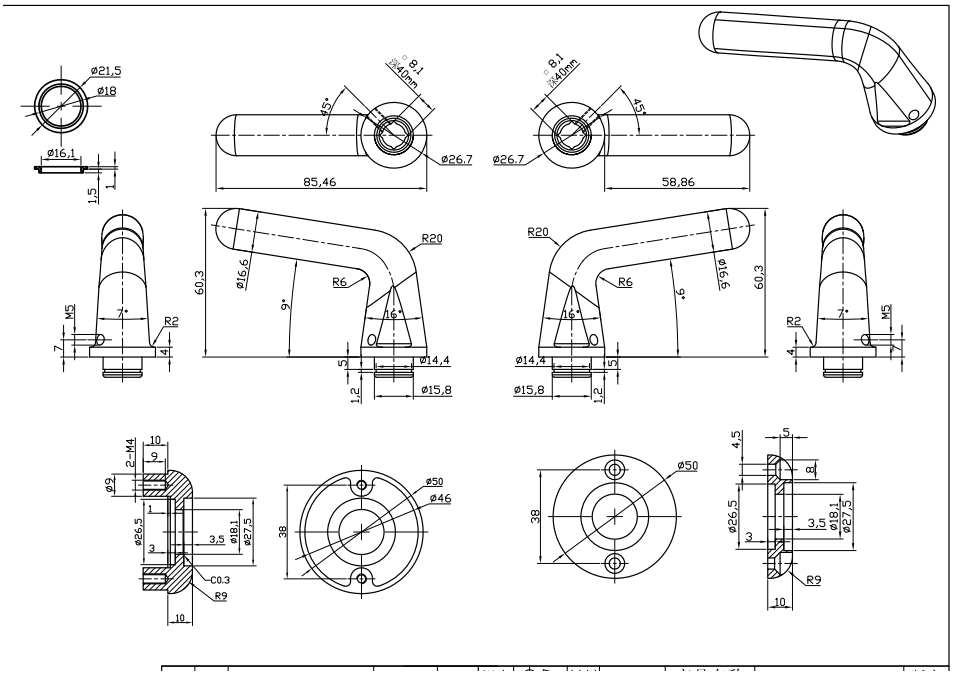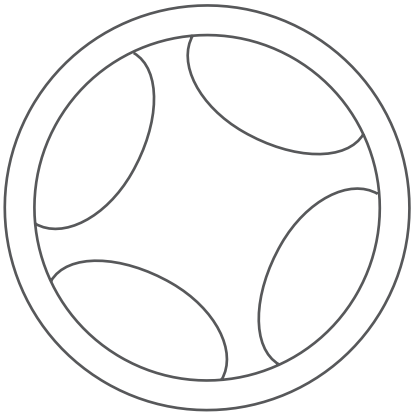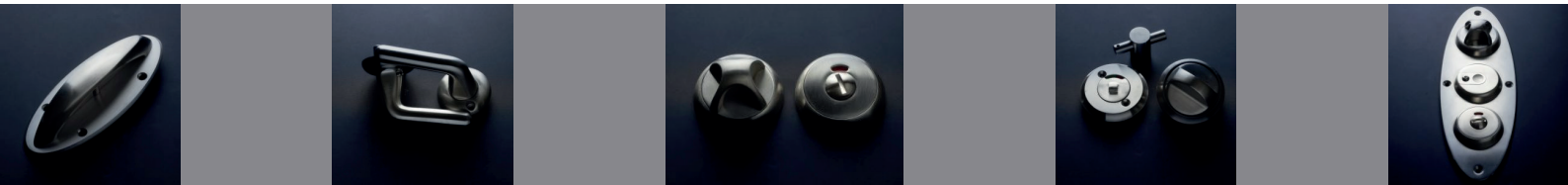
Clean with warm soapy water on a cloth